PRIME

2" LED ARCHITECTURAL ROUND FLANGELESS DOWNLIGHT
REMODEL

GENERAL INFORMATION

USE OF PRODUCT
The 2" Prime Downlight is a small aperture fixture which is ideal for residential and commercial applications. Available options include die-cast trims, various color temperatures, optics, filters, and dimmable drivers.

LED ENGINE
LED engine available in 2700K, 3000K, 3500K, or 4000K in standard 90+ CRI. 2-step MacAdam ellipse allows for color consistency between fixtures. The LED is mounted to an aluminum heat sink for maximum life output and thermal management. LED engine is accessible from below the ceiling.

OPTICAL LENS
Field replaceable optical lenses are available in 12°, 30°, 35°, 40°, and 50°. Easily achieve narrow spot to wide flood beam pattern.

ADJUSTMENT
Supports 359° locking rotation.

DIMMING
Available in five driver selections. (ID) Standard all-inclusive ELV (120V), Triac (120V), and 0–10V (120–277V) dimming driver called Intelligent Drive, 120–277V. (EEIS) eldoLED 1% Dim 0-10V (120-277V), Triac (120V), Max 20W. (EDIO) eldoLED 0.1% Dim (0–10V), 120–277V. (EDID) eldoLED 0.1% Dim (DALI). (EDD) eldoLED 1% Dim (DALI2). Drivers accessible from below the ceiling.

BEVEL
Bevel includes standard frosted acrylic diffuser. Remove standard frosted acrylic diffuser in field for 7% lumens increase. Consult factory for made-to-order finishes. Wet location for bathrooms and showers with standard lens on trim.

EMERGENCY BATTERY
Optional Emergency Battery (EM) available in 8W (≈800 lm), or 15W (≈1,500 lm) available for a minimum of 90 minutes. EM is replaceable from below the ceiling.

LABELS/COMPLIANCE/WARRANTY
- CSA listed for US and Canada
- Dry/Damp/Wet location rated
- 5-year limited warranty

GENERAL PERFORMANCE CHART

*Detailed performance chart may be found on page 3

	6W	9W	12W	15W	20W
Initial Lumens	657/955	890/1296	1122/1618	1267/2015	1485/2422
Delivered Lumens	599-784	809-1074	969-1360	1094-1685	1284-2070

* Values are listed at 3000K, 90+ CRI with a white bevel & trim.
Delivered lumens range based on beam spread.
Performance may vary +/- 5%

BEAM SPREAD

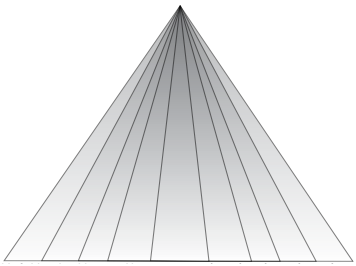

Available optics: 13˚ 30˚ 35˚ 40˚ 50˚

- Field replaceable TIR optics
- Easily achieve narrow spot to wide flood beam pattern
- Optional filters available upon request

PRIME FAMILY OF PRODUCTS

Downlight

TechZone®

WoodWorks®

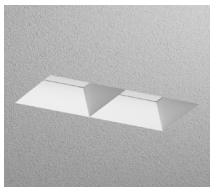
Multiple Dedicated Bevel

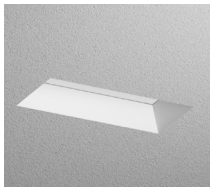
Multiple Open Bevel

Cylinder

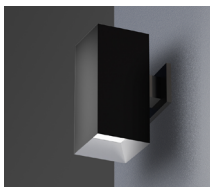
Square Luminaire

Integer Lights continually works to improve products and reserves the right to make changes which may alter the performance, appearance or specification of products.

PRIME

2" LED ARCHITECTURAL ROUND FLANGELESS DOWNLIGHT
REMODEL

ORDERING INFORMATION

Series	Wattage	Dimming	Color Temperature	Optical Lens	Filter
RPA2	**6W** - 6 Watt **9W** - 9 Watt **12W** - 12 Watt **15W** - 15 Watt **20W** - 20 Watt	**ID**[1] **-** Standard All-Inclusive ELV(120V), Triac(120V), and 0-10V(120-277V) Dimming Driver (Intelligent Drive) **EEIS**[2] **-** eldoLED 1% Dim 0–10V (120-127V), Triac (120V) **EDIO**[2] **-** eldoLED 0.1% Dim (0–10V) **EDID**[2] **-** eldoLED 0.1% Dim (DALI) **EDD**[2] **-** eldoLED 1% Dim (DALI2)	**27K** - 2700K **30K** - 3000K **35K** - 3500K **40K** - 4000K	**12**[3]- 12° **30** - 30° **35** - 35° **40** - 40° **50** - 50°	**None -** Included **F** - Frosted Filter **H** - Honey Comb **S** - Solite Filter **L** - Linear Filter

Housing	Module Type	Trim Style	Options
FRR - Remodel Round	**FMH** - Downlight	**LPR -** Flangeless Plaster **LDMR** - Dedicated Collar	**ER8WR** - 8W Remote Emergency Battery with Remote Test Switch (800 lm) **ER15WR** - 15W Remote Emergency Battery with Remote Test Switch (1,500 lm)

TRIM ORDERING INFORMATION

Bevel Finish	Bevel	Finish
2" Round Flangeless Regress Large Opening	2RLO-CL	**W** - White
	2RLO-CL	**B** - Black
	2RLO-CL	**H** - Haze
	2RLO-CL	**BZ** - Bronze
	2RLO-CL	**MTO** - Made To Order

Notes
1. Intelligent Drive is the standard driver
2. Must specify logarithmic or linear eldoLED diver
3. 12° spread without lens on trim

Integer Lights continually works to improve products and reserves the right to make changes which may alter the performance, appearance or specification of products.

PERFORMANCE CHART

	Optics	[1] 12°	30°	35°	40°	50°
6W	Initial Lumens	657	955	955	955	955
	Delivered Lumens	599	730	784	774	745
	UGR		16.6	14.9	18	19.3
9W	Initial Lumens	890	1296	1296	1296	1296
	Delivered Lumens	809	995	1074	1065	1014
	UGR		17.7	16	19.2	20.3
12W	Initial Lumens	1122	1618	1618	1618	1618
	Delivered Lumens	969	1249	1360	1353	1272
	UGR		18.5	16.9	20.2	21.8
15W	Initial Lumens	1267	2015	2015	2015	2015
	Delivered Lumens	1094	1533	1685	1614	1580
	UGR		18.8	17.5	20.9	22.8
20W	Initial Lumens	1485	2422	2422	2422	2422
	Delivered Lumens	1284	1858	2070	1956	1916
	UGR		19.4	18.3	21.6	23.5

* Values are listed at 3000K, 90+ CRI with a white bevel & trim.

Notes

1. 12° spread without lens on trim

COLOR TEMPERATURE MULTIPLIER FOR DELIVERED LUMENS

2700K	3000K	3500K	4000K
0.95	1.00	1.04	1.07

2RLO-CL REGRESS LARGE OPENING

- IES files are based on the large opening trim with diffused lens.

- Not suitable for wet locations
- Increase in lumens by approximately 7%

Integer Lights continually works to improve products and reserves the right to make changes which may alter the performance, appearance or specification of products.

REMODEL HOUSING DIMENSIONS

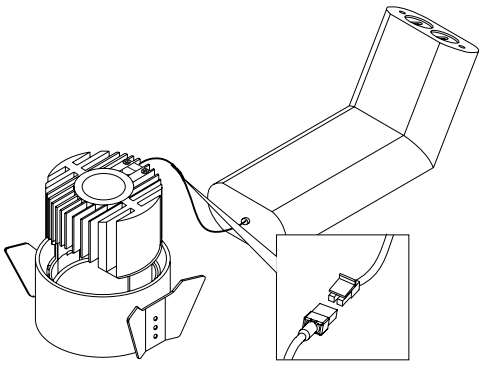

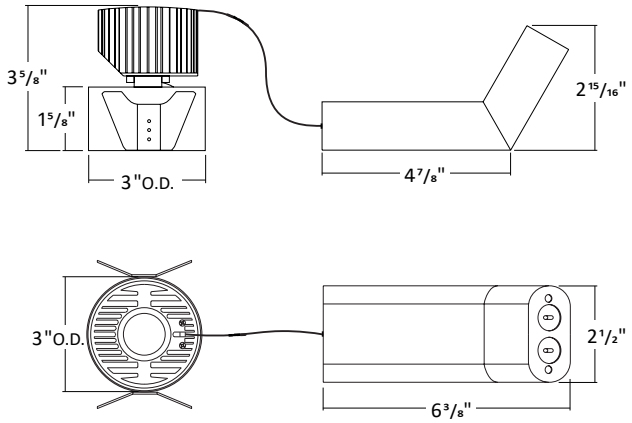

FLANGELESS PLASTER (LPR)

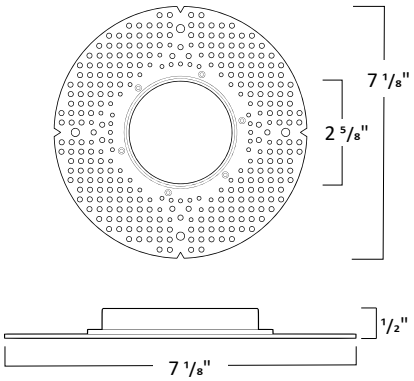

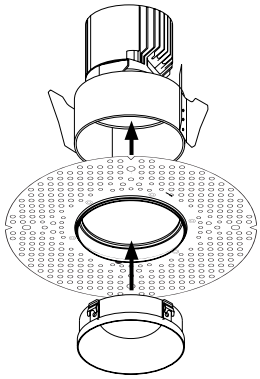

FLANGELESS MILLWORK WITH DEDICATED COLLAR (LDMR)

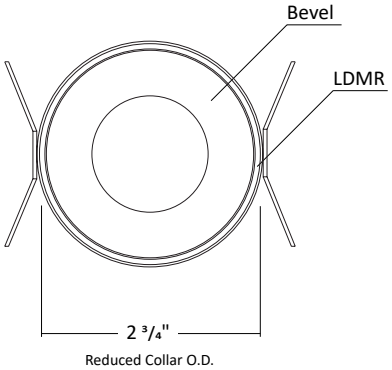

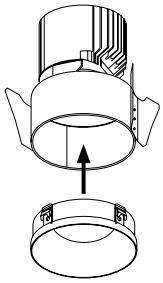

The reduced collar diameter allows for easy installation; the fixture drops into the ceiling opening and the bevel clicks securely into the collar.

PRIME

2" LED ARCHITECTURAL ROUND FLANGELESS DOWNLIGHT
REMODEL

LED MODULE

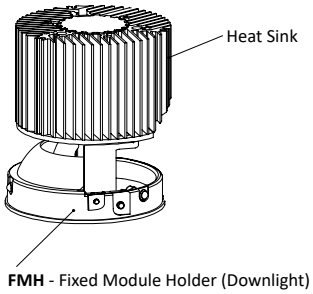

FILTERS

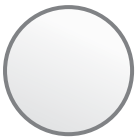

Frosted Filter

Honey Comb

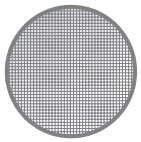

Solite Filter

Linear Filter

TRIM DIMENSIONS

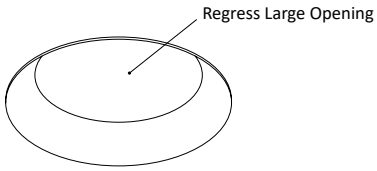

2RLO-CL

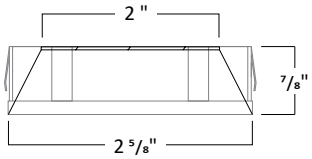

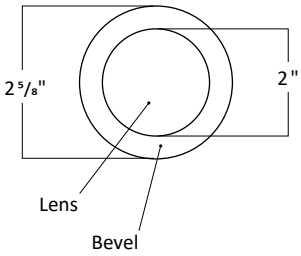

TRIM FINISH

White

Black

Haze

Bronze

*Consult Factory for Made to Order Finishes

Integer Lights continually works to improve products and reserves the right to make changes which may alter the performance, appearance or specification of products.

REMOTE EMERGENCY BATTERY WITH REMOTE TEST SWITCH

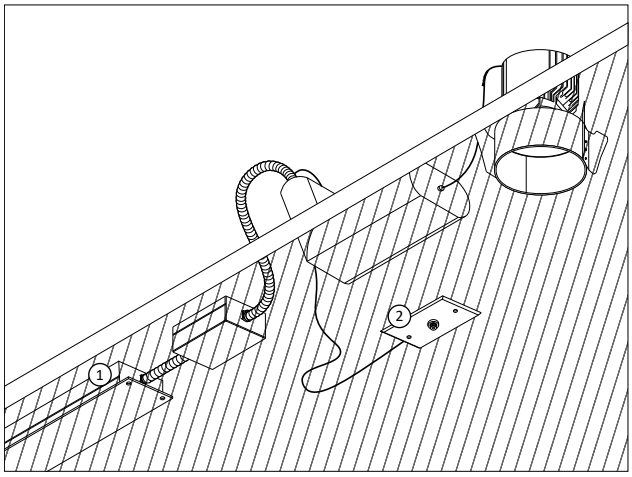

ER8WR and **ER15WR** is an 8W and 15W Emergency Battery that is remote to the fixture with a remote test switch. The EM unit is accessible from below the ceiling for replacement purposes.

1. Remote Emergency Battery
2. Remote Test Switch

EMERGENCY BATTERY NOTICE

Emergency battery backup units are shipped in a partially discharged state. Upon receipt, fixtures should be installed and connected to a continuous, unswitched AC power source immediately and charged for a minimum of 24 hours before testing or emergency operation. Delayed installation or failure to charge the battery promptly may result in reduced battery capacity or premature battery failure and is not covered under warranty.

Integer Lights continually works to improve products and reserves the right to make changes which may alter the performance, appearance or specification of products.