PRIME

2" LED ARCHITECTURAL ROUND FLANGELESS WALL WASH REMODEL

GENERAL INFORMATION

USE OF PRODUCT
The 2" Prime Wall Wash is a small aperture fixture which is ideal for residential and commercial applications. Available options include die-cast trims, various color temperatures, optics, filters, and dimmable drivers.

LED ENGINE
LED engine available in 2700K, 3000K, 3500K, or 4000K in standard 90+ CRI. 2-step MacAdam ellipse allows for color consistency between fixtures. The LED is mounted to an aluminum heat sink for maximum life output and thermal management. LED engine is accessible from below the ceiling.

OPTICAL LENS
Field replaceable optical lenses are available in 15°, 24°, 36°, and 50° Easily achieve narrow spot to wide flood beam pattern.

ADJUSTMENT
- Light engine locked at 20˚ tilt, consult factory for other tilt settings.
- Supports 359° locking rotation.

DIMMING
Available in five driver selections. (ID) Standard all-inclusive ELV (120V), Triac (120V), and 0–10V (120–277V) dimming driver called Intelligent Drive, 120–277V. (EEIS) eldoLED 1% Dim 0-10V (120-277V), Triac (120V), Max 20W. (EDIO) eldoLED 0.1% Dim (0–10V), 120–277V. (EDID) eldoLED 0.1% Dim (DALI). (EDD) eldoLED 1% Dim (DALI2). Drivers accessible from below the ceiling.

BEVEL
Bevel includes standard frosted acrylic diffuser. Remove standard frosted acrylic diffuser in field for 7% lumens increase. Consult factory for made-to-order finishes. Wet location for bathrooms and showers with standard lens on trim.

EMERGENCY BATTERY
8W (≈800 lm), or 15W (≈1,500 lm) available for a minimum of 90 minutes. EM is replaceable from below the ceiling.

LABELS/COMPLIANCE/WARRANTY
- CSA listed for US and Canada
- Dry/Damp/Wet location rated
- 5-year limited warranty

GENERAL PERFORMANCE CHART

*Detailed performance chart may be found on page 2

	6W	9W	12W	15W	20W
Initial Lumens	955	1296	1618	2015	2422
Delivered Lumens	593-619	805-840	1009-1050	1225-1273	1486-1546

* Values are listed at 3000K, 90+ CRI with a white bevel & trim.
Delivered lumens range based on beam spread.
Performance may vary +/- 5%

BEAM SPREAD

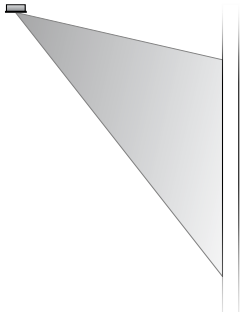

Field replaceable TIR optics

PRIME FAMILY OF PRODUCTS

Downlight

TechZone®

WoodWorks®

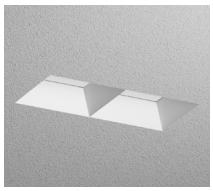
Multiple Dedicated Bevel

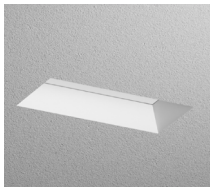
Multiple Open Bevel

Cylinder

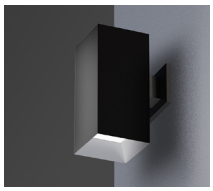
Square Luminaire

Integer Lights continually works to improve products and reserves the right to make changes which may alter the performance, appearance or specification of products.

PRIME

2" LED ARCHITECTURAL ROUND FLANGELESS WALL WASH
REMODEL

ORDERING INFORMATION

Series	Wattage	Dimming	Color Temperature	Optical Lens	Filter
RPA2	**6W** - 6 Watt **9W** - 9 Watt **12W** - 12 Watt **15W** - 15 Watt **20W** - 20 Watt	**ID**[1] **-** Standard All-Inclusive ELV(120V), Triac(120V), and 0-10V(120-277V) Dimming Driver (Intelligent Drive) **EEIS**[2] **-** eldoLED 1% Dim 0–10V (120-127V), Triac (120V) **EDIO**[2] **-** eldoLED 0.1% Dim (0–10V) **EDID**[2] **-** eldoLED 0.1% Dim (DALI) **EDD**[2] **-** eldoLED 1% Dim (DALI2)	**27K** - 2700K **30K** - 3000K **35K** - 3500K **40K** - 4000K	**15** - 15° **24** - 24° **36** - 36° **50** - 50°	**None -** Included **F** - Frosted Filter **H** - Honey Comb **S** - Solite Filter **L** - Linear Filter

Housing Type	Module Type	Trim Style	Options
FRR - Remodel Round	**AMHW** - Accent Wall Wash	**LPR -** Flangeless Plaster **LDMR** - Dedicated Collar	**ER8WR** - 8W Remote Emergency Battery with Remote Test Switch (800 lm) **ER15WR** - 15W Remote Emergency Battery with Remote Test Switch (1,500 lm)

TRIM ORDERING INFORMATION

Bevel Finish	Trim Type	Bevel
2" Round Flangeless Accent	2RLA-CL	**W** - White
	2RLA-CL	**B** - Black
	2RLA-CL	**H** - Haze
	2RLA-CL	**BZ** - Bronze
	2RLA-CL	**MTO** - Made To Order

Notes

1. Intelligent Drive is the standard driver
2. Must specify logarithmic or linear eldoLED diver

Integer Lights continually works to improve products and reserves the right to make changes which may alter the performance, appearance or specification of products.

PRIME

2" LED ARCHITECTURAL ROUND FLANGELESS WALL WASH
REMODEL

PERFORMANCE CHART

	Optics	15°	24°	36°	50°
6W	Initial Lumens	955	955	955	955
	Delivered Lumens	593	618	619	611
9W	Initial Lumens	1296	1296	1296	1296
	Delivered Lumens	805	840	840	830
12W	Initial Lumens	1618	1618	1618	1618
	Delivered Lumens	1009	1050	1050	1037
15W	Initial Lumens	2015	2015	2015	2015
	Delivered Lumens	1225	1273	1273	1257
20W	Initial Lumens	2422	2422	2422	2422
	Delivered Lumens	1486	1543	1546	1524

* Values are listed at 3000K, 90+ CRI with a white bevel & trim.

COLOR TEMPERATURE MULTIPLIER FOR DELIVERED LUMENS

2700K	3000K	3500K	4000K
0.95	1.00	1.04	1.07

2RLA-CL ACCENT

REMODEL HOUSING DIMENSIONS

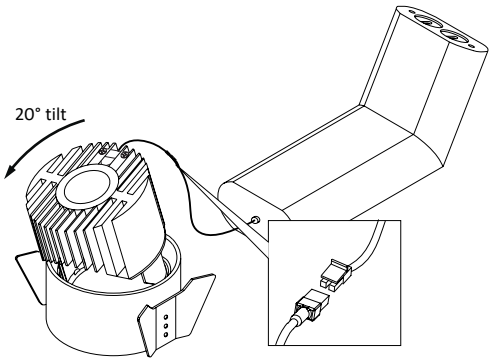

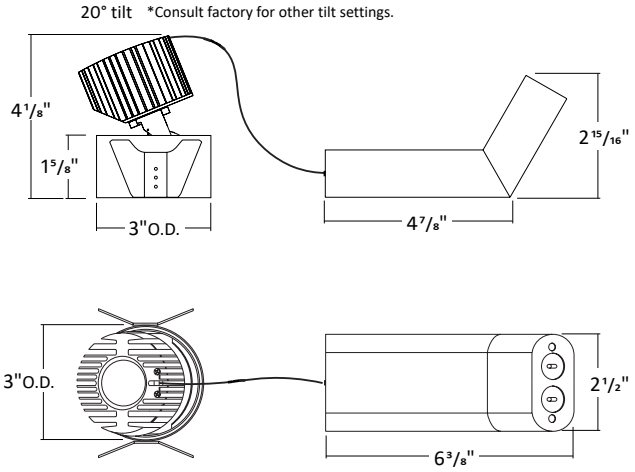

FLANGELESS PLASTER (LPR)

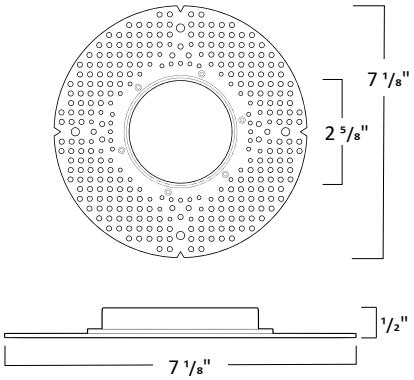

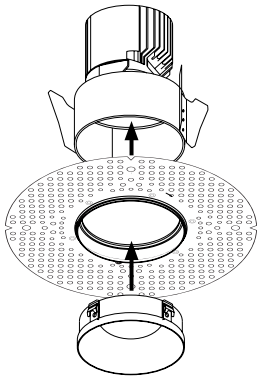

FLANGELESS MILLWORK WITH DEDICATED COLLAR (LDMR)

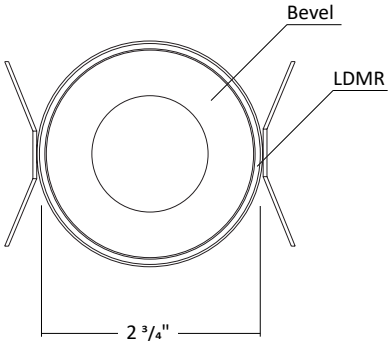

Reduced Collar O.D.

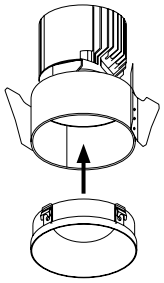

The reduced collar diameter allows for easy installation; the fixture drops into the ceiling opening and the bevel clicks securely into the collar.

TRIM DIMENSIONS

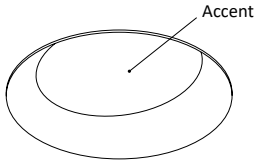

2RLA-CL

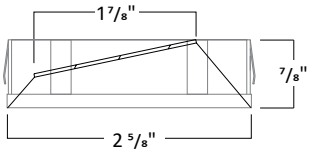

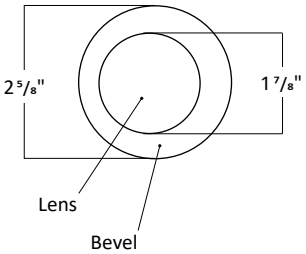

TRIM FINISH

White Black Haze Bronze

*Consult Factory for Made to Order Finishes

REMOTE EMERGENCY BATTERY WITH REMOTE TEST SWITCH

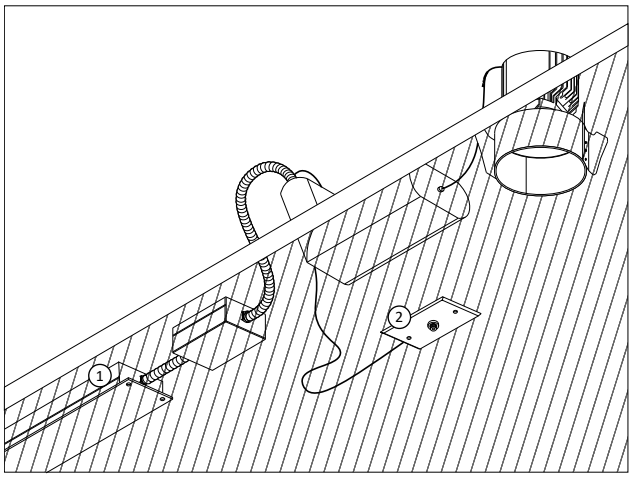

ER8WR and **ER15WR** is an 8W and 15W Emergency Battery that is remote to the fixture with a remote test switch. The EM unit is accessible from below the ceiling for replacement purposes.

1. Remote Emergency Battery
2. Remote Test Switch

EMERGENCY BATTERY NOTICE

Emergency battery backup units are shipped in a partially discharged state. Upon receipt, fixtures should be installed and connected to a continuous, unswitched AC power source immediately and charged for a minimum of 24 hours before testing or emergency operation. Delayed installation or failure to charge the battery promptly may result in reduced battery capacity or premature battery failure and is not covered under warranty.

Integer Lights continually works to improve products and reserves the right to make changes which may alter the performance, appearance or specification of products.