PRIME

PRIME 4” LED ARCHITECTURAL SQUARE LUMINAIRE

GENERAL INFORMATION

USE OF PRODUCT
PRIME Square Luminaire Series may be used in hospitality, commercial, retail, and residential applications. This product will reduce energy consumption, emits little heat, and reduces cooling loads for added costs savings. Approximately 75% in energy savings compared to incandescent light source. This product is for indoor use only.

LED ENGINE
LED engine available with CREE LEDs in 2700K, 3000K, 3500K, or 4000K in standard 93+ CRI. 2 Step MacAdam ellipse allows for color consistency between fixtures. LED mounted to aluminum heat sink for maximum life output and thermal management.

HOUSING
Rugged aluminum housing.

LED DRIVER
Durable dimmable driver provides high power factor with optimum thermal management to prevent damage caused by high temperature.

OPTICS
Field replaceable optical lens available in 15°, 24°, 30°, 35°, 40°, 50° and 70°. Easily achieve narrow spot to wide flood beam pattern. Option for frosted, honeycomb, or solite filter (2 Maximum).

MOUNTING
The PRIME Cylinder Series may be cable hung, stem mount, surface mount or wall mounted.

DIMMING
Available in nine driver selections. (ID) Standard all-inclusive ELV (120V), Triac (120V), and 0–10V (120–277V) dimming driver called Intelligent Drive, (EEI) eldoLED 1% Dim 0-10V, (EEIS) eldoLED 1% Dim 0-10V (120-277V) and Triac (120V), Max 20W, (EDIO) eldoLED 0.1 Dim 0-10V, (EDID) eldoLED 0.1% Dim DALI, (EDD) eldoLED 1% Dim DALI2, (LDE1) Lutron Hi-Lume 1% Ecosystem with Soft-on, Fade-to-Black Dimming, (L3DA) Hi-Lume 1% Ecosystem/3-Wire L3D Driver, (PEQ0) Lutron Hi-Lume Premier Ecosystem 0.1% with Soft-on, Fade-to-Black Dimming.

LABELS / COMPLIANCE
- CSA Listed for US and Canada
- Damp rated
- 5 year limited warranty.

GENERAL PERFORMANCE CHART

*Detailed performance chart may be found on page 2

	6W	9W	12W	15W	20W	24W
Initial Lumens	955	1296	1618	2015	2422	2799
Delivered Lumens	650-829	891-1135	1129-1436	1404-1744	1706-2122	1986-2470

* Values are listed at 3000K, 90+ CRI with a white bevel & trim.
Delivered lumens range based on beam spread.
Performance may vary +/- 5%

BEAM SPREAD

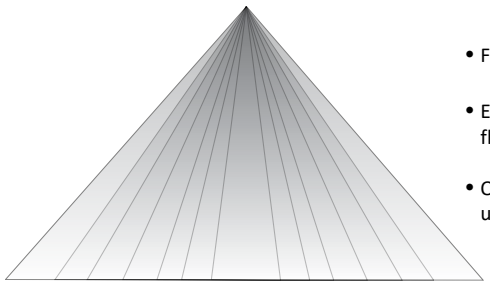

Available optics: 15˚ 24˚ 30˚ 35˚ 40˚ 50˚ 70˚

- Field replaceable TIR optics
- Easily achieve narrow spot to wide flood beam pattern
- Optional filters available upon request

PRIME FAMILY OF PRODUCTS

Downlight

TechZone®

WoodWorks®

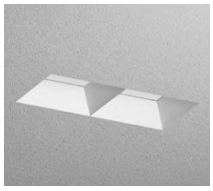
Multiple Dedicated Bevel

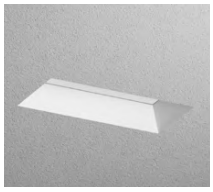
Multiple Open Bevel

Cylinder

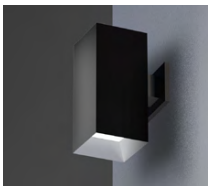
Square Luminaire

Integer Lights continually works to improve products and reserves the right to make changes which may alter the performance, appearance or specification of products.

PRIME

integer Lights

ORDERING INFORMATION

Series
RPA

Diameter
4 - 5”

Shape
SL - Square Luminaire

Length
10 - 10”

Directional
DL - Down Light
UL - Up Light

Wattage
6W - 6 Watt
9W - 9 Watt
12W - 12 Watt
15W - 15 Watt
20W - 20 Watt
24W - 24 Watt

Dimming
ID[1] - Standard All-Inclusive ELV, Triac, and 0–10V Dimming Driver (Intelligent Drive)
EEI[2] - eldoLED 1% Dim (0–10V)
EEIS[2,3] - eldoLED 1% Dim 0-10V (120-277V), Triac (120V), Max 20W
EDIO[2]- eldoLED 0.1% Dim (0-10V)
EDID[2]- eldoLED 0.1% Dim (DALI)
EDD[2]- eldoLED 1% Dim (DALI2)
LDE1[4] - Lutron Hi-Lume 1% Ecosystem with Soft-on, Fade-to-Black Dimming
L3DA[4] - Hi-Lume 1% Ecosystem/3-Wire L3D Driver
PEQ0 - Lutron Hi-Lume Premier Ecosystem 0.1% with Soft-on, Fade-to-Black Dimming

Color Temperature
27K - 2700K
30K - 3000K
35K - 3500K
40K - 4000K

Optical Lens
15[5]- 15°
24[5]- 24°
30 - 30°
35 - 35°
40 - 40°
50 - 50°
70 - 70°

Filter
None - Leave blank
F - Frosted Filter
H - Honey comb
S - Solite filter

Bevel Finish
W - White
B - Black
H - Haze
S - Specular Clear
WE - Wheat
MTO - Made to order

Cylinder Finish
BL - Black
WH - White
SL - Silver
MTO - Made to order

Mounting
PH - Pendant
SC - Single Cable
TC - Triple Cable
SM - Surface Mount
WM - Wall Mount

Option
ER8W - Emergency Battery with Remote test switch (800 lm)

Notes
1. Intelligent Drive is the standard driver
2. Must specify logarithmic or linear eldoLED diver
3. Available up to 20W only
4. Not offered in 6W
5. 15° and 24° spread without lens on trim.

PERFORMANCE CHART

	Optics	[1]15°	[1]24°	30°	35°	40°	50°	70°
6W	Initial Lumens	955	955	955	955	955	955	955
	Delivered Lumens	803	829	748	771	785	713	650
9W	Initial Lumens	1296	1296	1296	1296	1296	1296	1296
	Delivered Lumens	1097	1135	1022	1055	1073	971	891
12W	Initial Lumens	1618	1618	1618	1618	1618	1618	1618
	Delivered Lumens	1387	1436	1285	1332	1347	1217	1129
15W	Initial Lumens	2015	2015	2015	2015	2015	2015	2015
	Delivered Lumens	1632	1744	1591	1644	1659	1481	1404
20W	Initial Lumens	2422	2422	2422	2422	2422	2422	2422
	Delivered Lumens	1976	2122	1933	2002	2017	1803	1706
24W	Initial Lumens	2799	2799	2799	2799	2799	2799	2799
	Delivered Lumens	2300	2470	2243	2333	2346	2101	1986

* Values are listed at 3000K, 90+ CRI with a white bevel & trim.

Notes
1. 15° and 24° spread without lens on trim

DIFFUSED LENS

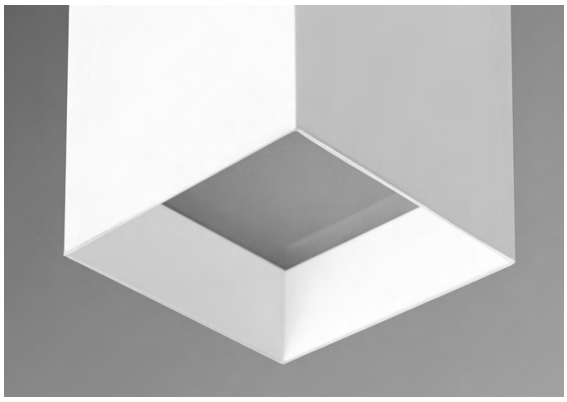

- Listed IES files are with diffused lens

OPTIONAL FIELD REMOVABLE LENS

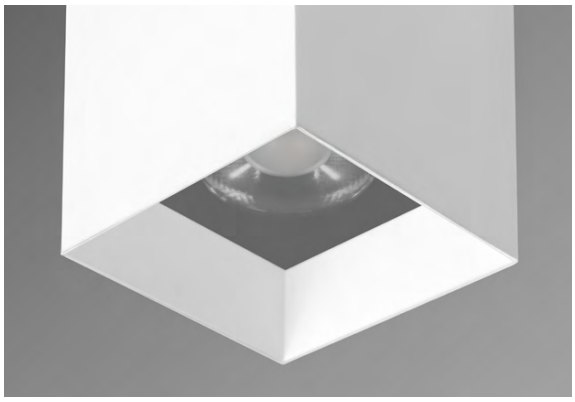

- Not suitable for wet locations
- Increase in lumens by approximately 7%

Integer Lights continually works to improve products and reserves the right to make changes which may alter the performance, appearance or specification of products.

RPA4-SL-10 DIMENSIONS

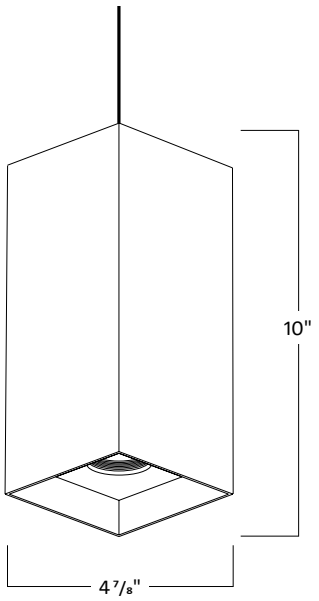

TRIM DIMENSIONS

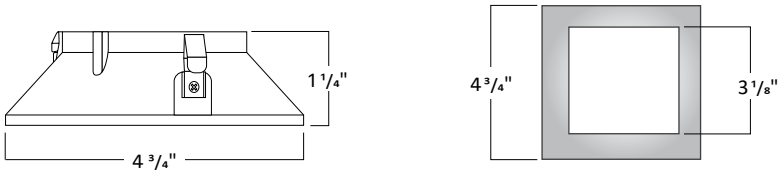

CABLE HUNG DIMENSIONS

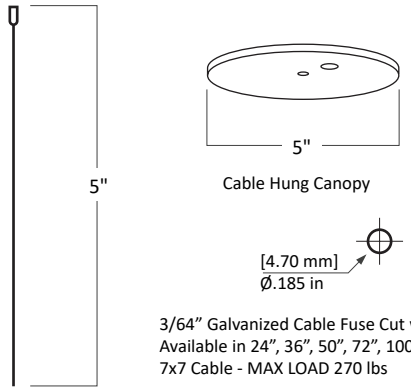

3/64” Galvanized Cable Fuse Cut with Die Cast #1 Stop
Available in 24”, 36”, 50”, 72”, 100”, 120”, & 150” Lengths
7x7 Cable - MAX LOAD 270 lbs

STEM MOUNT DIMENSIONS

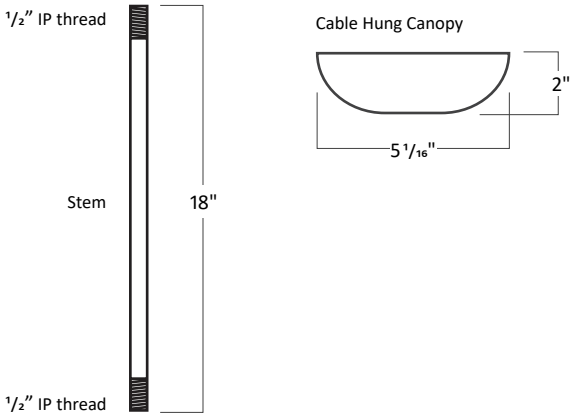

Integer Lights continually works to improve products and reserves the right to make changes which may alter the performance, appearance or specification of products.